Combined solution

H-beam cutting and Tube cutting in one system

Kranendonk combines high quality with production flexibility by using special developed software

Cutting solutions

Over the years we have supplied many cutting solutions and with this experience we developed a combined H-beam and Tube cutting system. The system offers all of our benefits: innovative software, high accuracy, and great service and support. This unique system improves your quality, efficiency and throughput. The controls, robot and process equipment are all integrated into a user friendly production system.

Flexibility

Our system offers what you desire: production flexibility. High efficiency, reduced costs and easy operation are the key factors when choosing for Kranendonk's production systems. The combined H-beam and Tube cutting system is also production ready for plate cutting, and with additional equipment and an additional ARAC module, the system is open for welding tasks as well.

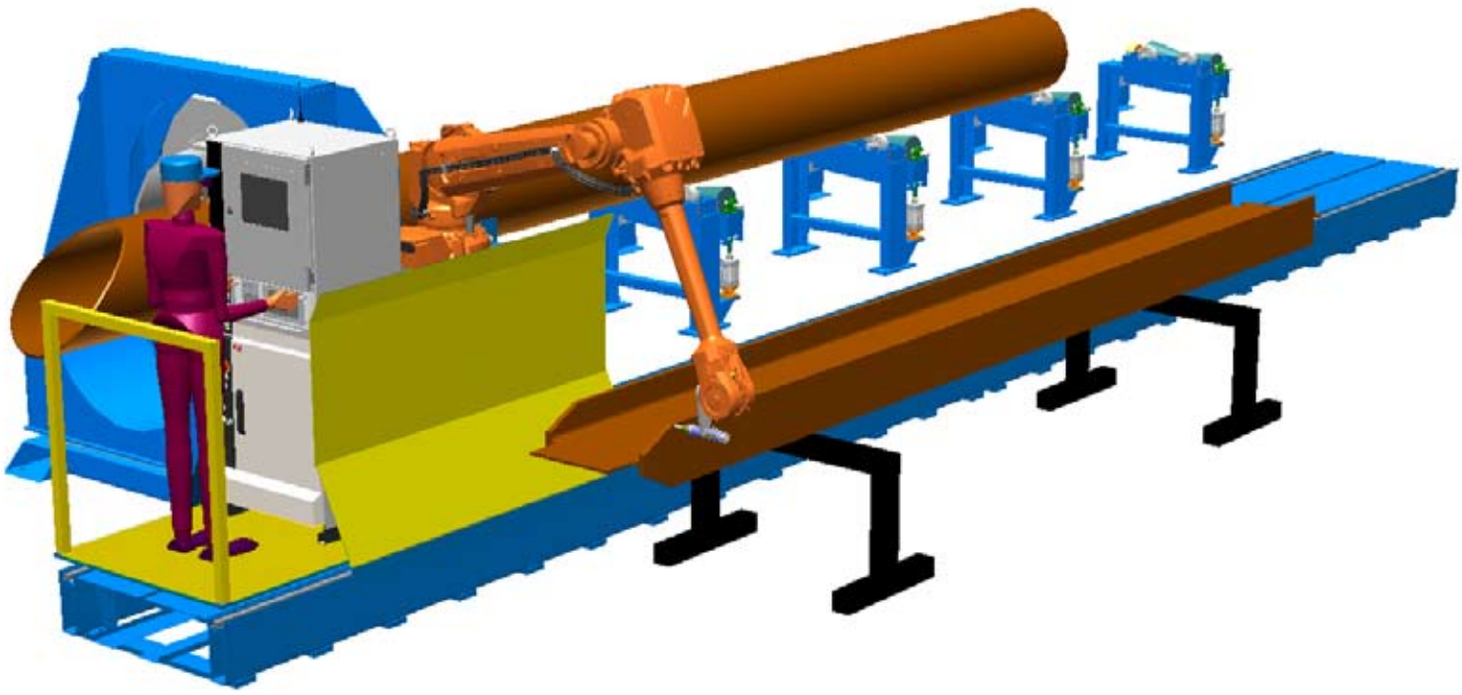

H-beam and Tube cutting system

ARAC software

The Multi-functional Production System is supplied with Kranendonk ARAC software. The advanced ARAC software combines easy macro-based programming of the robots with simple graphical online cell and process control. ARAC is able to:

- Display the geometrical information by use of simulation in Excel.
- Interactively add the necessary processing information (CAM data) such as: which contours to process, processing speeds, process parameters, tool angles (e.g. torch angle) to create bevels.
- Convert the data into such a form, that the ARAC compiler can generate a robot program from these data.

Accuracy

For H-beam cutting, Kranendonk supplies Dynamic Flexibility Production (DFP) software in ARAC, which automatically adapts the robot program to the tolerances in H-beams. For tube cutting, Kranendonk's Dual Laser Height Control system (DLHC) guarantees perfect cuts. The DLHC systems continuously measures tolerances in the tube and corrects the robot path so that the cutting torch will stay at the optimal cutting height.

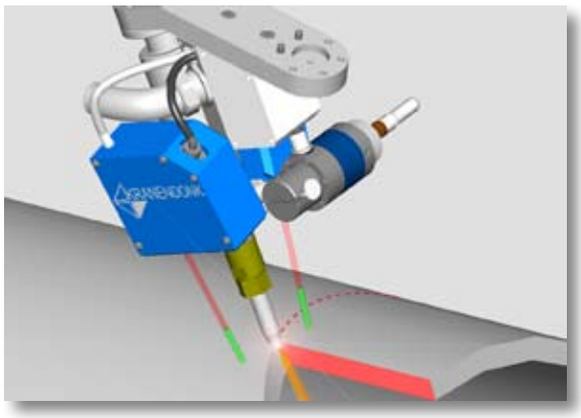

Dual Laser Height Control adjusts the robot's height to the tube's unroundness to guarantee perfect cuts

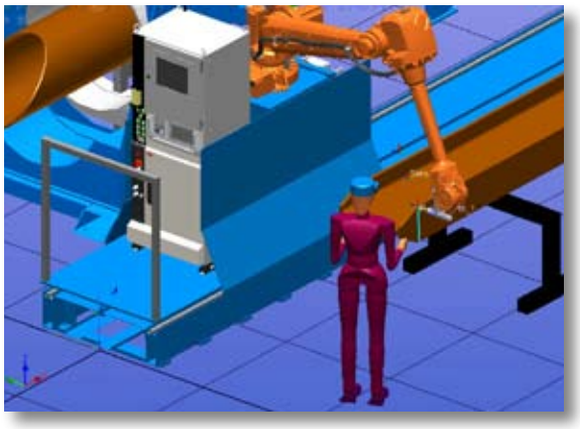

Man machine cooperation is possible due to state of the art safety solutions

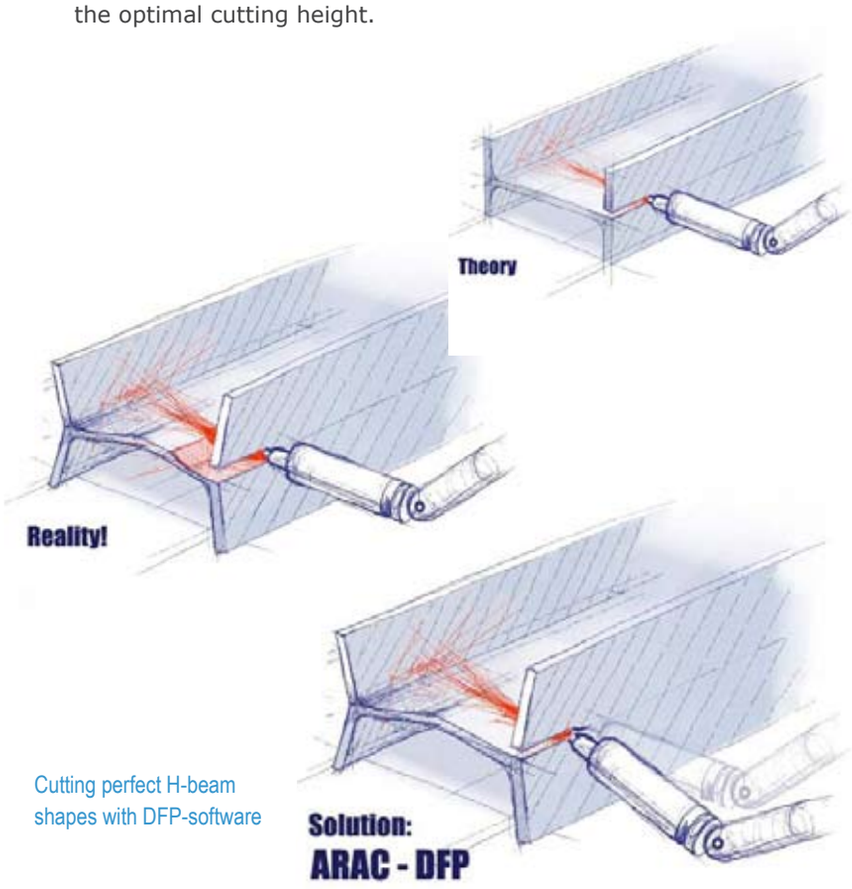

Cutting perfect H-beam shapes with DFP-software

Our systems are designed to be user friendly

Kranendonk Production Systems B.V.
P.O. Box 6147
4000 HC Tiel
The Netherlands
T +31 344 623944
E info@kranendonk.com

www.kranendonk.com